REVISIONS			
REV	DESCRIPTION	DATE	APPROVED
–	INITIAL RELEASE	08/17/01	G. SAKONA

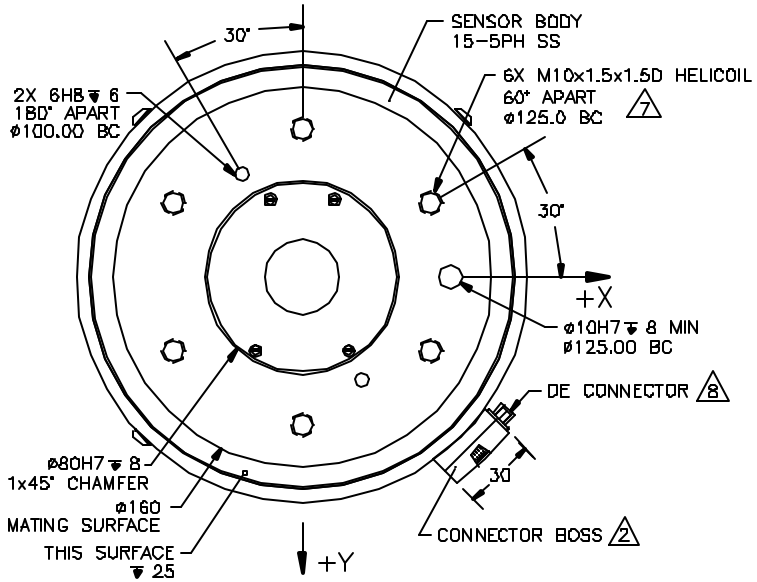

TOOL VIEW

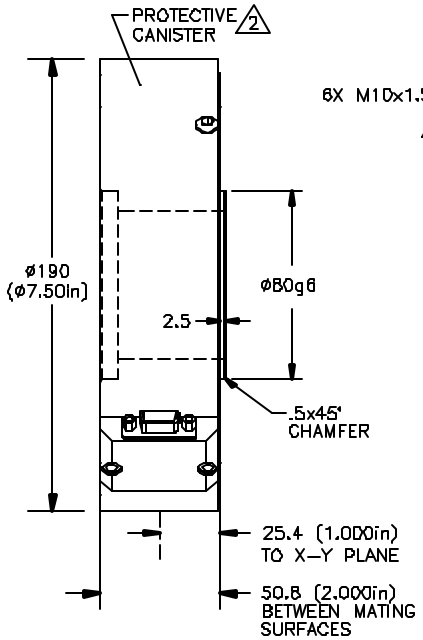

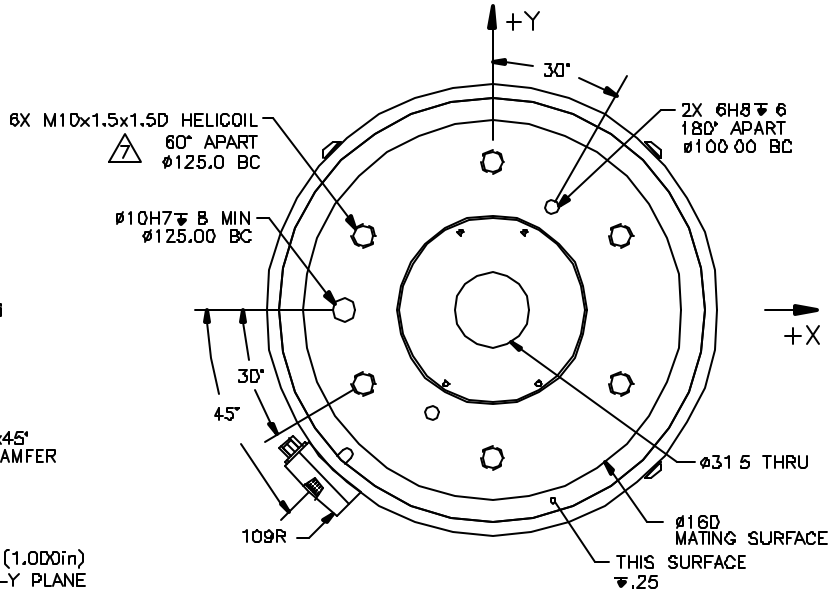

ROBOT VIEW

NOTES:

1. ALL DIMENSIONS ARE IN MILLIMETERS UNLESS OTHERWISE NOTED.
2. NOTED PARTS MAY BE STAINLESS STEEL OR ALUMINUM PER CUSTOMER REQUEST.
3. STAINLESS STEEL PARTS ARE ELECTROPOLISHED, ALUMINUM PARTS ARE TYPE 2, CLASS 2 BLUE ANODIZED.
4. AVAILABLE SENSOR LOAD RATINGS INCLUDE: 150, 250, 400, 500 AND 650lb.
   WHERE: FULL SCALE Fx, Fy = SENSOR RATING
   FULL SCALE Fz = SENSOR RATING * 2
   FULL SCALE Mx, My, Mz = SENSOR RATING * NOMINAL DIAMETER (7.50in)
5. AXES SHOWN ASSUME OPPOSITE SIDE HELD FIXED
6. ROBOT VIEW IS RIGHT HAND RULE (JR3 STANDARD) THIS FORCES TOOL VIEW TO BE LEFT HAND RULE
7. MAXIMUM ALLOWED PENETRATION OF MOUNTING SCREWS INTO SENSOR TOOL SIDE IS 20mm.
8. CONNECTOR IS DE19 FOR SENSORS WITH EXTERNAL ELECTRONICS, DE9 WITH INTERNAL ANALOG ELECTRONICS.
9. TORQUE MOUNTING SCREWS TO 64Nm (48ftlb) IN 3 EQUAL STEPS IN AN A-C-E-B-D-F SEQUENCE.

TITLE: INTERFACE, 75E20 SENSOR, M125B BOLT PATTERN, SS			
MAT'L: AS SHOWN	MODEL: 75E20S-M125B-8 75E20S-M125B-A	DRAWN: GCS	
TOLERANCES: (UNLESS OTHERWISE NOTED) X = ±.25mm X = ±.10mm .XX = ±.025mm ANGLES = ±0.1°		SCALE: 1/2 AND NOTED	
		DWG SIZE: B	
		DWG NO: 4828	REV: –
JR3, INC. WOODLAND, CA 95776		SHEET 1 OF 1	

AUTHORIZED COPY